GO-FER® IV

Since 1948 made in U.S.A.

One Machine for All Applications!

412-331-1776
sales@bugo.com
www.bugo.com

Bug-O Systems is committed to empowering our customers by providing operator controlled mechanized solutions for their welding, cutting and custom applications.

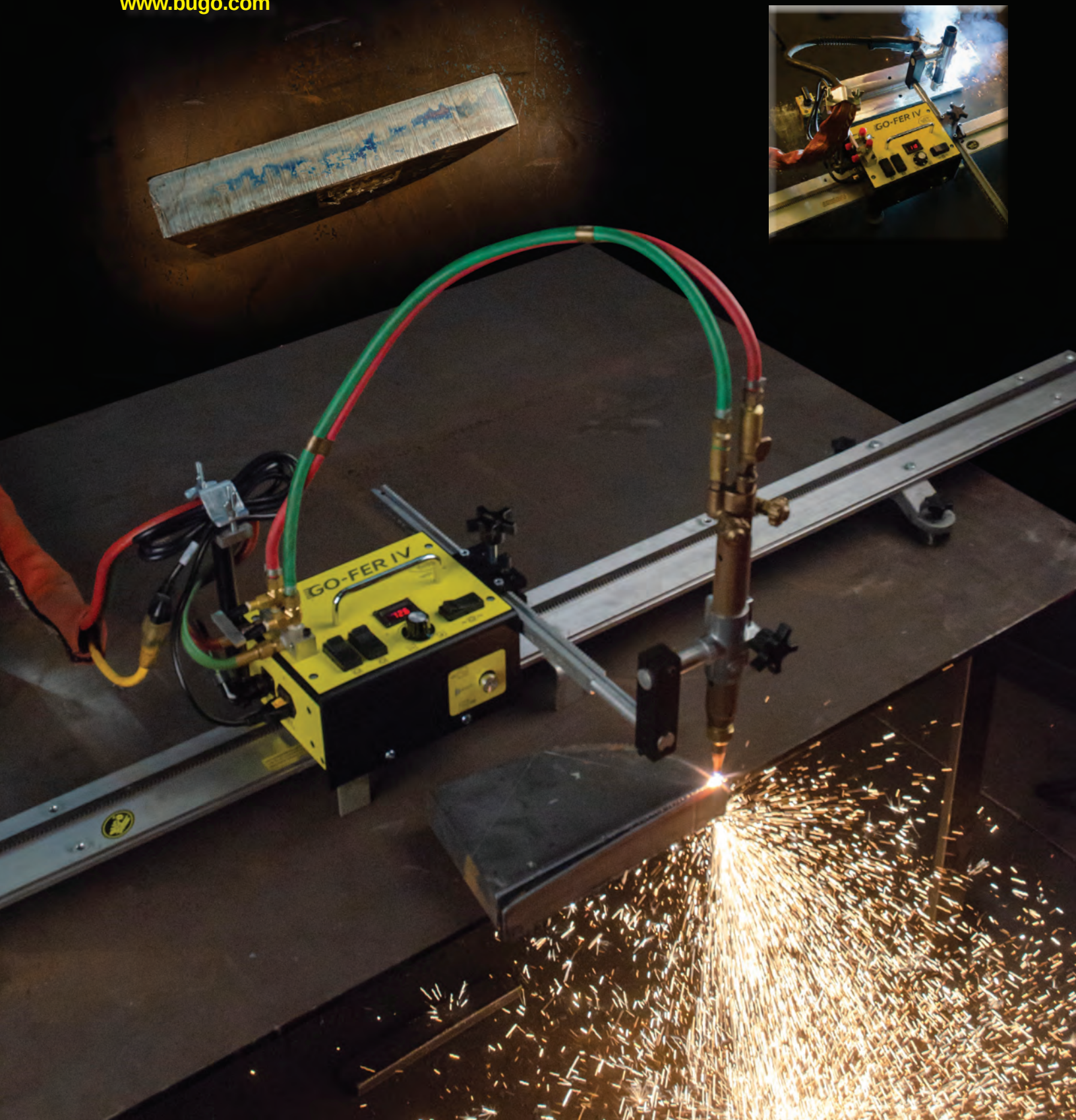

GO-FER® IV

The **GO-FER® IV** is a portable, versatile and robust tractor designed for all your cutting and welding needs. It's like having three units in one! When used for cutting, you can utilize either oxy-fuel or plasma torches. It can also carry a Plasma torch for gouging. The GO-FER® IV can be used in all positions. The system includes rack & pinion drive and the wheels are secured within the V groove in the sides of the rail. These features allow travel in any plane, even upside down.

When utilized for straight line cutting and beveling with an oxy-fuel torch, this unit includes everything required except the torch itself. The torch holder will accept any standard 1-3/8" (35mm) diameter machine torch with a 32 pitch gear rack. The quick-action gas manifold mounted to the rear of the machine is used as a strain reliever for the torch hoses and gives the operator the ability to turn the gases on and off without having to readjust the gas flow of the torch. The Cable Anchor provides strain relief for the supply hoses and power cord.

With an ample speed range of 2.5-100 IPM (63.5 -2540 MM/MIN) and direct rack and pinion drive, the GO-FER® IV is perfectly designed to work in conjunction with a plasma cutting system. The GO-FER IV includes a built-in contactor switch to turn the plasma on and off. Easy torch adjustment is provided to make straight plasma cuts and bevels. With the right tip in the plasma torch you can perform mechanized gouging without changing machines.

The optional Welding Kit (GOF-3255) provides everything you need for in-process torch adjustment of the vertical and horizontal plane. The fits-all clamp will accept and accommodate any hand held or machine barrel welding gun and allow the operator to position the gun at any angle they desire. The built-in trigger contactor allows the operator to activate the wire feeder from a switch on the top of the unit.

Shown above, plasma setup to perform back gouging

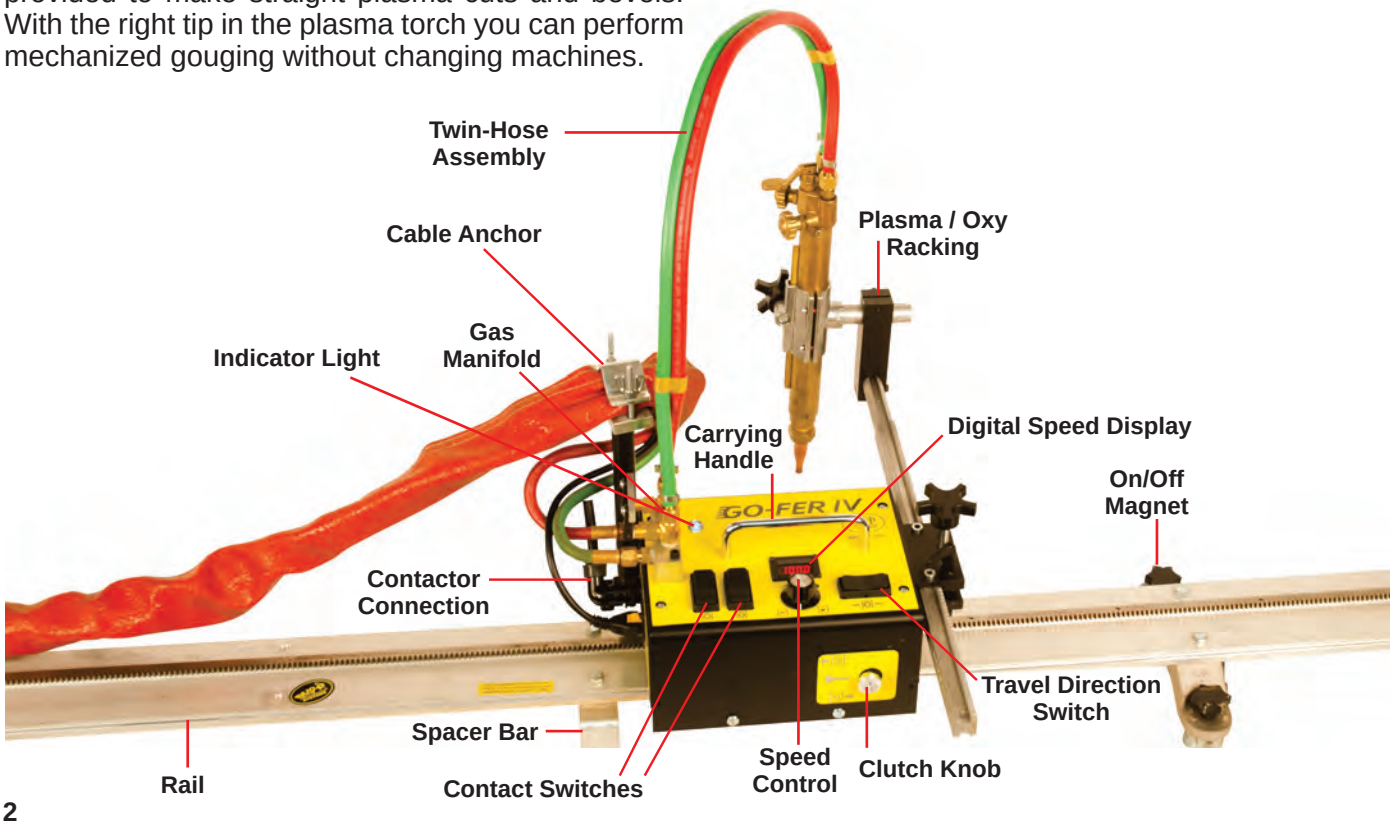

GO-FER® IV

The GO-FER® IV runs on Bug-O's patented Aluminum Rigid Rail for straight-line travel or Bug-O's Semi-Flex Rail for diameters of 30' (9.1 M) or greater. The rail sections are joinable for unlimited run length and are positioned with strong, Rare-Earth, On/Off Magnets or Bug-O Vacuum cup support system for non-ferrous applications.

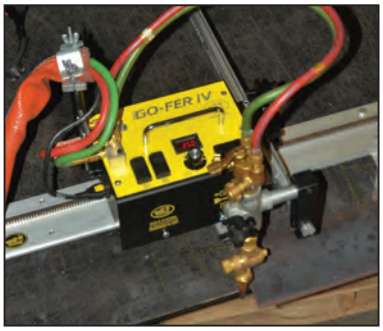

Shown above, oxy-fuel setup of Go-fer IV

Shown above, plasma setup of Go-fer IV

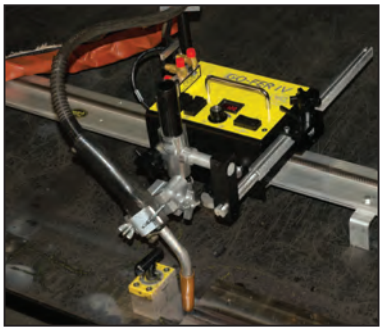
Shown above, welding setup of Go-fer IV

Features:

- A drive motor to suit all applications with speeds from 2.5 to 100 ipm (63.5-2540 mm/min)
- Dynamic braking of motor prevents drift in all positions
- Bright digital pre-settable travel speed meter for actual ipm
- Two independent built-in contactors for dual torch applications
- Large industrial sealed rocker switches (welding glove friendly)
- Quick–Action Gas manifold, twin-hose assembly and cable anchor
- Power cord with plug-in lock
- Torch adjustment racking for oxy-fuel and plasma cutting
- Low profile case
- Top Central Carrying Handle
- Proudly Made in USA
- Supported by our 3-Year Warranty
- Optional Weld Racking Group (GOF-3255) available
- An International version (GOF-4002) includes a 240v power cord and twist-lock plug

GOF-4000 Kit Includes the following:

1	ARR-1080	Heavy Duty Rigid Rail 93.50" (2.37m)
2	ARM-2010	On/Off Magnet Assembly
2	ARM-2015	Spacer Bar Assembly
1	**GOF-4001**	**Go-fer IV® 120 VAC base machine** ***(Included in the Kit)***

GOF-4002 240 VAC Kit

For machine only (no rail or magnets)
GOF-4001 120 VAC Base machine
GOF-4003 240 VAC Base machine

NOTE: Base machine is dual voltage (120 - 240 VAC) The only difference is the supplied power cord.

GOF-4001 Includes the following:

1		Go-fer IV® Drive Unit
1	BUG-5188	Torch Holder Assembly
1	BUG-5451	3.5" Rackholder
1	BUG-5462-5	Right Angle Clamp Assembly, 5"
1	BUG-9448	1/2" Wrench
1	BUG-9449	Hex Key Kit Special
1	CIR-1010-3	Twin Hose Assembly
1	GOF-4018	Cable Anchor Assembly
1	GOF-4025	Manifold Assembly
1	MUG-1617	Cable Connector, 4-T, F, Elbow
1	PAN-1029	Rack 22-1/2" Length

Additional Rail Options:

(1) **ARR-1080** 8' Aluminum Rigid Rail
93-7/16" Actual Length (2.37 m)
(2) **ARM-2010** R.E. On/Off Magnet
(2) **ARM-2015** Spacer Bar

(1) **ARR-1085** 4' Aluminum Rigid Rail
46-9/16" Actual Length (1.18 m)
(2) **ARM-2010** R.E. On/Off Magnet
(2) **ARM-2015** Spacer Bar

(1) **AFR-3000** Semi-Flex Rail
93-7/16" Actual Length (2.37 m)
(4) **AFR-2010** R.E. On/Off Magnet for Semi-Flex Rail

AFR-3000 Semi-Flex Rail can be bent inside or outside to a minimum radius of 15' (5.0 m) or 30' (10.0 m) diameter without permanent deformation.

ARM-2010
ARM-2010-HH2*

R.E. On/Off Magnet for ARR Rail only

Holding power 250 lbs. (113.4 kg)

Can be switched on and off for rapid set-up.

ARM-2015

Spacer Bar for ARR Rail only

AFR-2010
AFR-2010-HH2*

R.E. On/Off Magnet for AFR-3000 Rail only

Holding power 250 lbs. (113.4 kg)

Can be switched on and off for rapid set-up.

***All <u>XXX</u>-2010-HH2** are "High Heat" models and are rated at 180°C (356°F) for high temperature applications.

Vacuum Systems For Non-Ferrous Metals

Standard Vacuum Support Kits:
ARV-1080 Vacuum Kit
For ARR-1080 & AFR-3000 Rails.
ARV-1085 Vacuum Kit
For ARR-1085 Rails

ARV-2020 **120 Volt/50-60 Hz**
ARV-2030 **220 Volt/50-60 Hz**

or

100-1297-120 **120 Volt/50-60 Hz**
100-1297-240 **220 Volt/50-60 Hz**

The Vacuum Pump Kit is recommended for use with a maximum of four (4) pieces of rail, or sixteen (16) vacuum bars.

ARV-1085 Vacuum Kit for
ARR-1085 4' (102 mm) Rigid Rail

ARV-1080 Vacuum Kit for
ARR-1080 8' (203 mm) Rigid Rail

ARV-1080 Vacuum Kit for
AFR-3000 8' (203 mm) Semi-Flex Rail

GO-FER® IV ACCESSORIES

Accessories:

MUG-1119-32
3-Hose Assembly,
32" Length

GOF-4025-3
3-Hose
Manifold

BUG-1271 2-Hose & Rack, 10" (254 mm) Barrel, Acet. (Harris)
BUG-4071 2-Hose & Rack, 10" (254 mm) Barrel, Natural Gas Propane (Harris)
BUG-1293 2-Hose & Rack, 10" (254 mm) Barrel, Natural Gas Propane (Victor)
BUG-1294 2-Hose & Rack, 10" (254 mm) Barrel, Acet. (Victor)

Please refer to Bug-O Torch Brochure for torch tips and more info.

Panographs are spring-loaded devices that maintain torch stand-off and compensate for plate surface irregularities.

PAN-1010*
Cutting Panograph Assembly

*Requires a PAN-1015 Machined Rack, sold separately.

GOF-4030
Dual Gun Racking

ARR-1090 Rail Alignment Tool gauging device for rapid alignment of aluminum rigid rails to joint

AFR-1090 Rail Alignment Tool gauging device for rapid alignment of semi-flex rails to joint

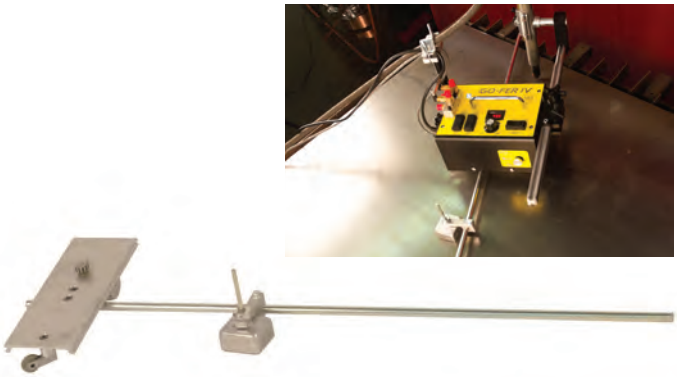

GOF-3142 Radius Cutting Attachment
Enables the Go-fer IV to be quickly changed from a straight line to a circle cutting machine.

Size Range: 8" to 96" (203 mm to 2438 mm) diameter

GO-FER® IV WELDING ACCESSORIES

Accessories:

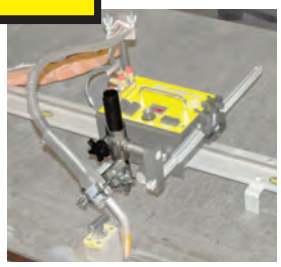

GOF-3255
Welding Support Kit
Provides vertical torch adjustment

PAN-1007*
Welding Panograph Assembly

*Requires a PAN-1015 Machined Rack, sold separately.

MDS-1085 Weld Contact Cable 15'
MDS-1085-25 Weld Contact Cable 25'
MDS-1085-50 Weld Contact Cable 50'

All-In-One (AIO) Mechanized Guns for GO-FER with PC Style Power Cord

Choose from the options below to fit your application.

1 GUN

Each gun includes:

5X 100-0490 / 65-3103
EHD Retaining Head/Diffuser

10X 100-0489 / 65-1135
EHD Contact Tip 0.035"

10X 100-0488 / 65-1145
EHD Contact Tip 0.045"

2X 100-0635 / 65-2550 Nozzle,
Copper 1/2" Bore, 1/8" Tip Recess

1X 100-0492 / 64-4515 0.045-1/16",
15 Ft., Coil Liner

100-1011-1-4.5-XX 500 amp Lightning Auto Gun, 180 degree gooseneck with integrated cable management system

100-1011-1-4.5-T *Includes 100-0484 Tweco #4 Power Pin*
100-1011-1-4.5-M *Includes 100-0485 Miller Power Pin*
100-1011-1-4.5-L *Includes 100-0486 Lincoln Power Pin Old Style*

2 BUG-O TRIGGER CABLE

Connects the contact cable in the torch to the contact trigger amphenol on the bug.

100-1012-1-0.15 4 pin male panel connector

3 WIRE FEEDER TRIGGER CABLES

Required to choose 1
Connects the contact cable in the torch to the wire feeder.

100-1020-1-0.15 (two male spade connectors)

100-1020-2-0.15 4-P Miller

100-1020-3-0.15 5-P Lincoln

Contact American Torch Tip for other consumables: 800-342-8477

GO-FER® IV WITH CONTROL PENDANT

GO-FER IV with Pendant:

An alternate **GO-FER® IV** model is available which includes a remote operator's pendant and a 10' pendant cable. This allows the operator to control and operate the **GO-FER® IV** from a short distance.

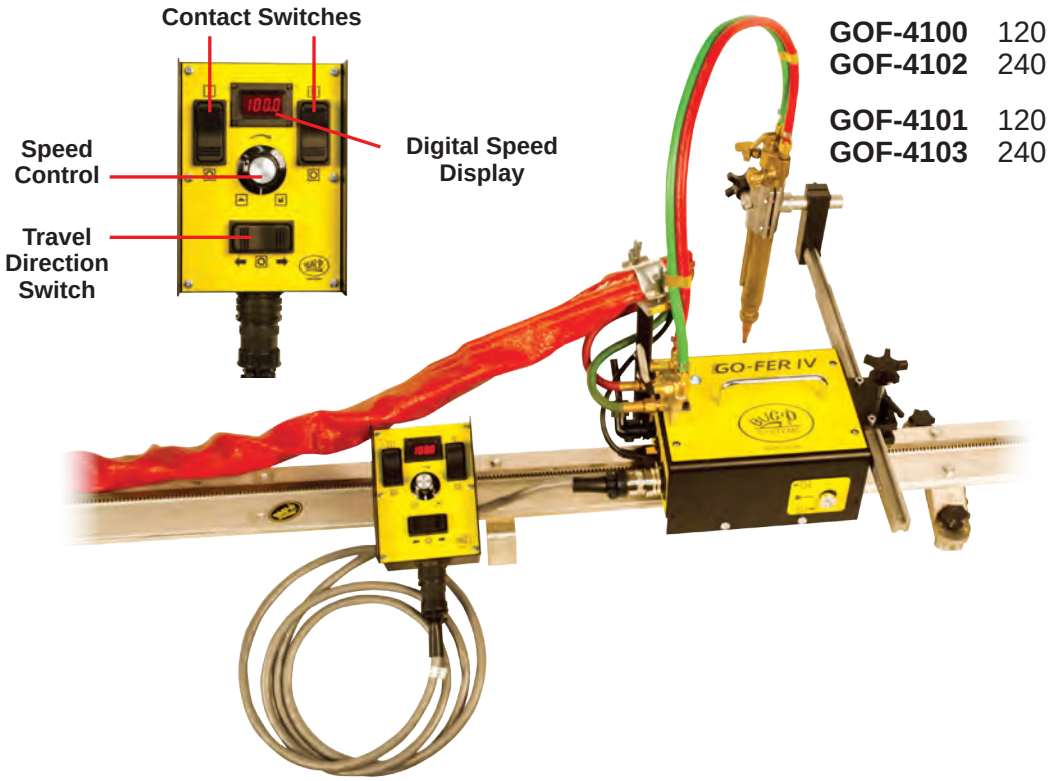

GOF-4100 120 VAC Kit
GOF-4102 240 VAC Kit

GOF-4101 120 VAC Base Machine
GOF-4103 240 VAC Base Machine

GOF-4100 Kit Includes the following:

1	ARR-1080	Heavy Duty Rigid Rail 93.50" (2.37m)
2	ARM-2010	On/Off Magnet Assembly
2	ARM-2015	Spacer Bar Assembly
1	**GOF-4101**	**Go-fer IV® w/Pendant 120 VAC base machine** ***(Included in the Kit)***

GOF-4102 240 VAC Kit

For machine only (no rail or magnets)
GOF-4101 120 VAC Base machine
GOF-4103 240 VAC Base machine

NOTE: Base machine is dual voltage (120 - 240 VAC) The only difference is the supplied power cord.

GOF-4101 Includes the following:

1		Go-fer IV® Drive Unit
1	BUG-5188	Torch Holder Assembly
1	BUG-5451	3.5" Rackholder
1	BUG-5462-5	Right Angle Clamp Assembly, 5"
1	BUG-9448	1/2" Wrench
1	BUG-9449	Hex Key Kit Special
1	CIR-1010-3	Twin Hose Assembly
1	GOF-4018	Cable Anchor Assembly
1	GOF-4025	Manifold Assembly
1	MUG-1617	Cable Connector, 4-T, F, Elbow
1	PAN-1029	Rack 22-1/2"
1	GOF-4150	Pendant
1	GOF-4160-10	Pendant Cable, 10 ft.

Additional Pendant Cable lengths can be purchased separately.

GOF-4160-15 15' Pendant Cable
GOF-4160-25 25' Pendant Cable
GOF-4160-30 30' Pendant Cable

GO-FER® IV

Technical Data:

Part Numbers: **GOF-4XXX**
120VAC/50-60Hz/1Ph
240VAC/50-60Hz/1Ph

Travel Speed: Infinitely variable from 2.5-100 ipm (63.5-2540 mm/min)

Load Capacity: 15 lbs (6.8 kg) vertical
60 lbs (27.3 kg) horizontal

Magnet Holding Power: 250 lbs (113 kg)

Model Number	Net Weight	Shipping Weight	Dimensions
GOF-4001	17 lbs. (7.7 kg)	26 lbs. (11.8 kg)	24" L x 11" W x 11" H 610 x 279 x 279 mm
GOF-4003	17 lbs. (7.7 kg)	26 lbs. (11.8 kg)	24" L x 11" W x 11" H 610 x 279 x 279 mm
GOF-4101	17 lbs. (7.7 kg)	26 lbs. (11.8 kg)	24" L x 11" W x 11" H 610 x 279 x 279 mm
GOF-4103	17 lbs. (7.7 kg)	26 lbs. (11.8 kg)	24" L x 11" W x 11" H 610 x 279 x 279 mm
GOF-4000	37 lbs. (16.78 kg)	(Box 1): 26 lbs. (11.8 kg) (Box 2): 16 lbs. (7.26 kg)	(Box 1): 24" L x 11" W x 11" H 610 x 279 x 279 mm (Box 2): 96" L x 3" W x 5" H 2438 x 76.2 x 127 mm
GOF-4002	37 lbs. (16.78 kg)	(Box 1): 26 lbs. (11.8 kg) (Box 2): 16 lbs. (7.26 kg)	(Box 1): 24" L x 11" W x 11" H 610 x 279 x 279 mm (Box 2): 96" L x 3" W x 5" H 2438 x 76.2 x 127 mm
GOF-4100	37 lbs. (16.78 kg)	(Box 1): 26 lbs. (11.8 kg) (Box 2): 16 lbs. (7.26 kg)	(Box 1): 24" L x 11" W x 11" H 610 x 279 x 279 mm (Box 2): 96" L x 3" W x 5" H 2438 x 76.2 x 127 mm
GOF-4102	37 lbs. (16.78 kg)	(Box 1): 26 lbs. (11.8 kg) (Box 2): 16 lbs. (7.26 kg)	(Box 1): 24" L x 11" W x 11" H 610 x 279 x 279 mm (Box 2): 96" L x 3" W x 5" H 2438 x 76.2 x 127 mm

Dimensions:

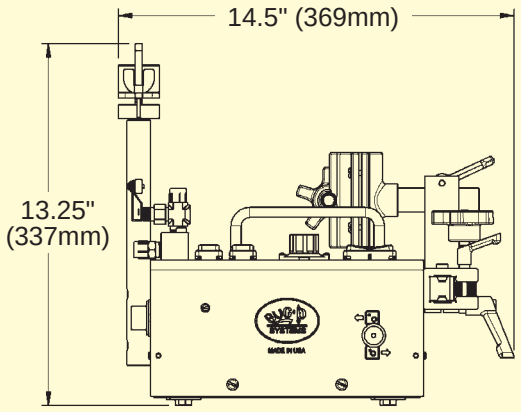

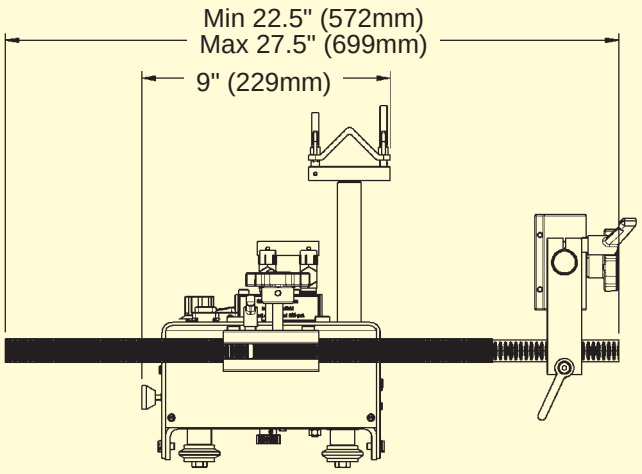

© Weld Tooling Corp. ΧΡΙΣΤΟΣ ROM 1:16 Printed in U.S.A.

LIT-GO-FER4-BRO-1026