INSTRUCTIONS AND PARTS MANUAL

DC IV Drive Unit

Please record your equipment identification information below for future reference. This information can be found on your machine nameplate.

Model Number: _____

Serial Number: _____

Date of Purchase: _____

Whenever you request replacement parts or information on this equipment, always supply the information you have recorded above.

LIT-DCIV-IPM-1026

Bug-O Systems is committed to empowering our customers by providing operator controlled mechanized solutions for their welding, cutting and custom applications.

BUG O SYSTEMS
A DIVISION OF WELD TOOLING CORPORATION
280 TECHNOLOGY DRIVE CANONSBURG, PENNSYLVANIA, 15317-9564 USA
PHONE: 412-331-1776 https://www.bugo.com FAX: 412-331-0383

SAFETY

PROTECT YOURSELF AND OTHERS FROM SERIOUS INJURY OR DEATH. KEEP CHILDREN AWAY. BE SURE THAT ALL INSTALLATION, OPERATION, MAINTENANCE AND REPAIR PROCEDURES ARE PERFORMED ONLY BY QUALIFIED INDIVIDUALS.

ELECTRIC SHOCK can kill.

1. The equipment is not waterproof. Using the unit in a wet environment may result in serious injury. Do not touch the equipment when wet or standing in a wet location.

2. Never open the equipment without first unplugging the power cord or serious injury may result.

3. Verify the customer-supplied power connections are made in accordance with all applicable local and national electrical safety codes. If none exist, use International Electric Code (IEC) 950.

4. Never remove or bypass the equipment power cord ground. Verity the equipment is grounded in accordance with all applicable local and national electrical safety codes. If none exist, use International Electrical Code (IEC) 950.

READ INSTRUCTIONS

Read the instruction manual before installing and using the equipment.

EQUIPMENT DAMAGE POSSIBLE.

1. Do not plug in the power cord without first verifying the equipment is OFF and the cord input voltage is the same as required by the machine or serious damage may result.

2. Do not leave the equipment unattended. Remove from the worksite and store in a safe location when not in use.

FALLING EQUIPMENT can cause serious personal injury and equipment damage.

Faulty or careless user installation is possible. As a result, never stand or walk underneath equipment.

MOVING PARTS can cause serious injury.

1. Never try to stop the pinion from moving except by removing power or by using the STOP control.

2. Do not remove any protective panels, covers or guards and operate equipment.

CAUTION

DO NOT LEAVE EQUIPMENT UNATTENDED WHEN NOT IN USE!

Remove from work site and store in a safe location.

DC IV DRIVE UNIT

INSTRUCTION AND PARTS MANUAL

TABLE OF CONTENTS

PAGE

4.....INTRODUCTION
5.....TECHNICAL DATA
6 .....EXPLODED VIEW / BUG-5100-_ BG DC IV DRIVE UNIT
7 .....PARTS LIST / BUG-5100-_ BG DC IV DRIVE UNIT
8 .....WIRING DIAGRAM / DC IV DRIVE UNIT
8.....ELECTRICAL COMPONENT CHART
9.....CARRIAGES FOR DC IV DRIVE UNITS
10-11....DETAILED SETUP
12.....OPTIONS FOR DC IV DRIVE UNITS
13.....STANDARD RACKING
13.....HEAVY DUTY RACK SYSTEM
14.....EXTRA HEAVY DUTY RACK SYSTEM
15.....ALUMINUM RIGID RAIL / “ARR”
16.....FLEX RAIL
17.....STANDARD MAGNET ASSEMBLIES
18.....VACUUM SUPPORT KIT
19.....ARV-1036 INTERMEDIATE VAC SUPPORT BAR
20.....VACUUM PUMP / EXPLODED VIEW
21.....VACUUM PUMP / PARTS LIST
22.....TROUBLESHOOTING GUIDE
23.....WARRANTY

THIS PRODUCT IS COVERED BY ONE OR MORE PATENTS WORLD WIDE.

INTRODUCTION

The DC-IV Drive Unit is the basic drive for many BUG-O SYSTEMS machines. This drive unit mounts on BUG-O carriages designed for DC drives. The DC-IV is a positive rack and pinion drive with a wide range solid state speed control. Once mounted on a carriage, the drive unit will run in any position using Aluminum Rigid Rail, Aluminum Flex Rail or Bent Rigid Rail [with a minimum radius of 10' (3 m)].

FEATURES:

A. Wing Nut 1/4-28
B. Cam Clutch engages and disengages the drive
C. Power Cord
D. Power Indicator Light
E. Forward-Off-Reverse Switch
F. Infinitely Variable Speed Control
G. Circuit Breaker
H. Factory Installed Pinion provides a high torque, low speed range
J. Alternate Pinion bypasses the bull gear to obtain a low torque, high speed range

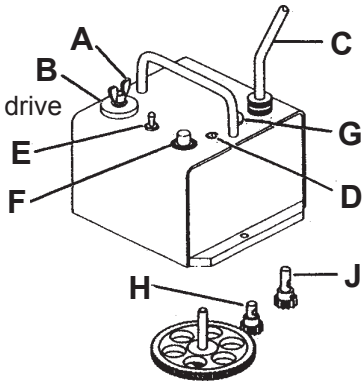

ASSEMBLY AND OPERATING INSTRUCTIONS

The DC-IV Drive Unit has been factory tested and is ready to be mounted on any standard BUG-O SYSTEMS carriage.

To install the drive unit, screw the cam clutch stud into the carriage. Use the 5/16 x 3/8 socket head shoulder screw provided to attach the DC-IV to the carriage.

Rotate the **Cam Knob (B)** to move the drive in and out of engagement with the rack.

To lock the drive position, tighten the **1/4-28 Wing Nut (A)** provided.

To position the drive unit, loosen the **1/4-28 Wing Nut (A)** and turn the **Cam Knob (B)** far enough to disengage the drive pinion from the rack. Move the carriage to the starting point on the rail. Turn the **Cam Knob (B)** to engage the drive pinion with the rack. Retighten the **1/4-28 Wing Nut (A)** to lock the drive carriage into position.

Two pinion gears are provided. The **Factory Installed Pinion (H)** engages the bull gear to provide a high torque, low speed range. The user can easily install the **Alternate Pinion (J)** to bypass the bull gear and obtain a low torque, high speed range.

Once the **Power Cord (C)** is plugged into the appropriate power source, the **Pilot Light (D)** will glow. **Switch (E)** controls the direction of travel, with the center position as “OFF”. **Knob (F)** controls the speed.

The **Circuit Breaker (G)** protects the drive unit against overload or electrical faults.
CAUTION: IF THE CIRCUIT BREAKER OPENS, FIND AND CORRECT THE CAUSE OF FAILURE BEFORE RESETTING.

TECHNICAL DATA

Power Requirements: - 60 watts at rated voltage:

DC IV: BUG-5100-_BG 120 VAC/50-60/1
BUG-5102-_BG 240 VAC/50-60/1
BUG-5104-_BG 42 VAC/50-60/1

Dimensions: 7.12"L x 6.75"W x 6.63"H
(181 mm x 171 mm x 168 mm)

Net Weight: 17 lbs. (7.7 kg)
Shipping Weight: 21 lbs. (9.5 kg)

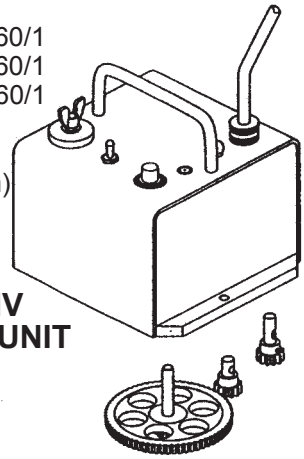

DC IV DRIVE UNIT

DIMENSIONS:

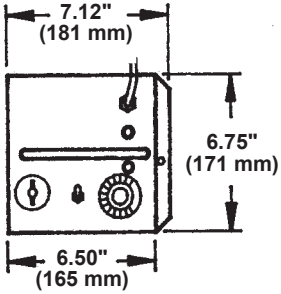

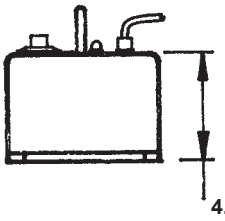

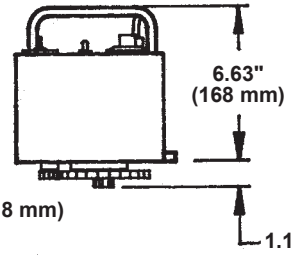

Drive Load Chart

Pinion Gear Used	Speed Range		Continuous			Model Number		
	in/min.	(mm/min.)	Vert. LBS	Load KG	GEAR RATIO	120/50-60/1	240/50-60/1	42/50-60/1
Low Speed	1.5-30	(38-750)	50	22	50:1	BUG-5100-CBG	BUG-5102-CBG	BUG-5104-CBG
High Speed	8-160	(200-4000)	3	1.4				
Low Speed	.7-15	(19-380)	75	34	100:1	BUG-5100-EBG	BUG-5102-EBG	BUG-5104-EBG
High Speed	4-80	(100-2000)	15	7				
Low Speed	.5-10	(12-255)	100	45	150:1	BUG-5100-FBG	BUG-5102-FBG	BUG-5104-FBG
High Speed	2-50	(50-1250)	30	14				

EXPLODED VIEW / BUG-5100-_BG
DC IV DRIVE UNIT

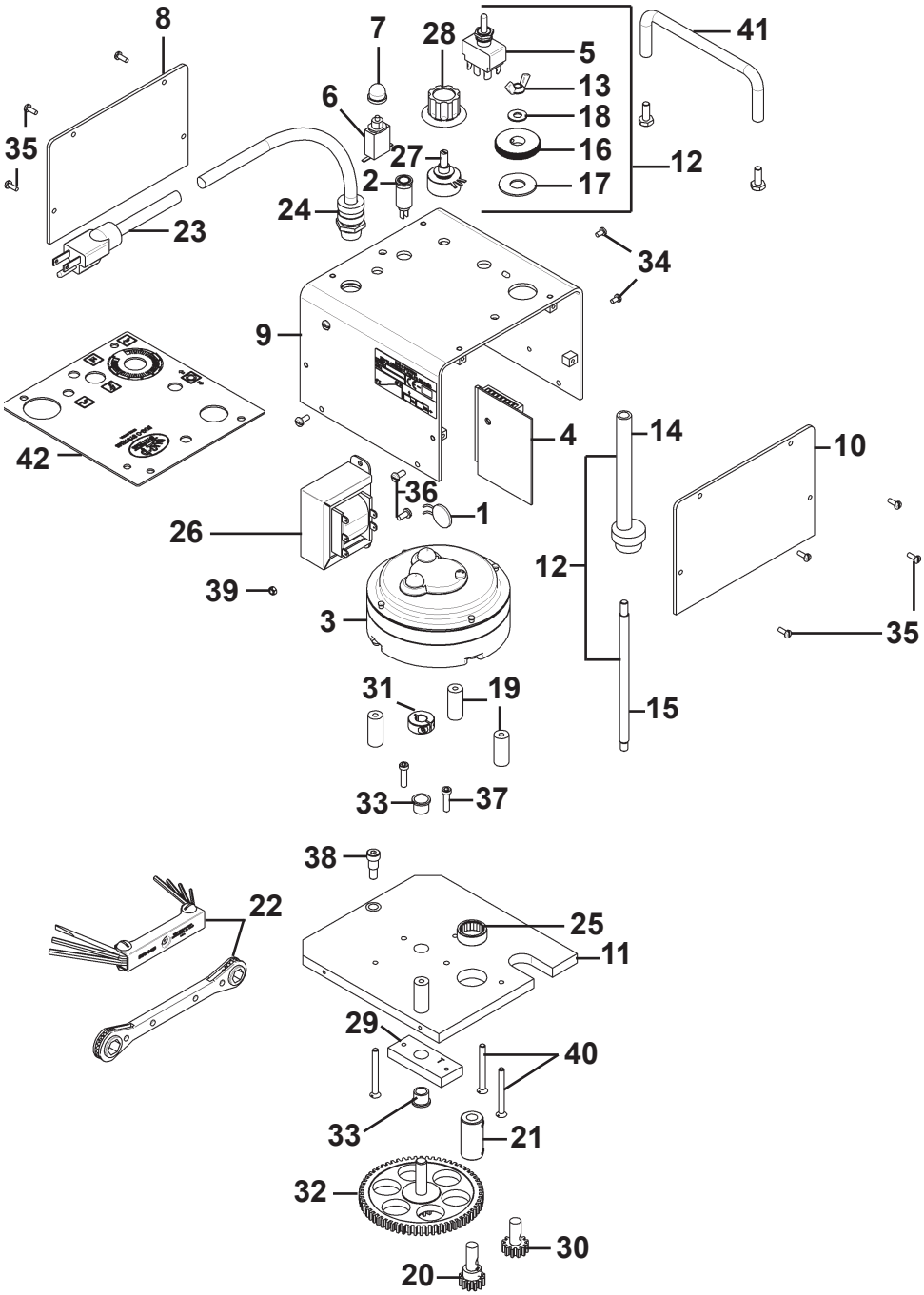

PARTS LIST / BUG-5100-_BG
DC IV DRIVE UNIT

ITEM	QTY.	PART NO.	DESCRIPTION
*1	1	BUG-1393	Volt Trap 120 VAC
*2	1	BUG-1415	Pilot Light 120 VAC
**3	1	BUG-1550	Gear Motor; (150:1 for BUG-5100-FBG)
4	1	BUG-1725	Precision Speed Control
5	1	BUG-2255	Toggle Switch
*6	1	BUG-2923	Circuit Breaker w/ Reset. 7A
7	1	BUG-2924	Reset Button Seal
8	1	BUG-2988	End Plate
9	1	BUG-5111	Cover
10	1	BUG-5112	End Plate
11	1	BUG-5114	Swivel Plate
12	1	BUG-5120	Cam Clutch Assembly (Includes items 13 thru 18)
13	1	BUG-2767W	Wing Nut 1/4-28
14	1	BUG-5113	Tube & Cam Assembly
15	1	BUG-5116	Stud
16	1	BUG-5119	Knob
17	1	BUG-5122	Delrin Washer
18	1	WAS-0240	1/4 Washer
19	4	BUG-5121	Stand Off
20	1	BUG-5128	Drive Pinion w/ Long Shaft
21	1	BUG-5131	Sleeve
22	1	BUG-9444	Tool Kit
*23	1	BUG-9445	Power Cord 120 VAC
24	1	BUG-9446	Cord Grip
25	1	BUG-9614	Needle Bearing
*26	1	BUG-9675	Transformer 120 VAC
27	1	BUG-9677	Potentiometer
28	1	BUG-9687	Knob
29	1	BUG-5126	Bar
30	1	BUG-5127	Drive Pinion w/ Short Shaft
31	1	BUG-9012	Locking Collar
32	1	BUG-9013	Gear Assembly
33	2	BUG-9635	Flange Bearing 3/8
34	2	FAS-0112	Pan Hd. Screw 6-32 x 1/4
35	8	FAS-0114	Pan Hd. Screw 6-32 x 3/8
36	7	FAS-0124	Pan Hd. Screw 8-32 x 3/8
37	2	FAS-0537	Soc. Hd. Cap Screw 10-24 x 3/4
38	1	FAS-0654	Soc. Hd. Shldr. Screw 5/16 x 3/8 x 1/4-20
39	3	FAS-1320	Hex Nut 8-32
40	4	FAS-2824	Flt. Hd. Slt. Screw 8-32 x 1 3/4
41	1	GOF-3019	Handle w/ Nuts
42	1	BUG-5109	DC-IV Legend Plate

* See Electrical Component Chart for 240 VAC and 42 VAC part numbers.

** BUG-1600 Gear Motor: (50:1 for BUG-5100-CBG)
BUG-1595 Gear Motor: (100:1 for BUG-5100-EBG)

WIRING DIAGRAM / DC IV DRIVE UNITS

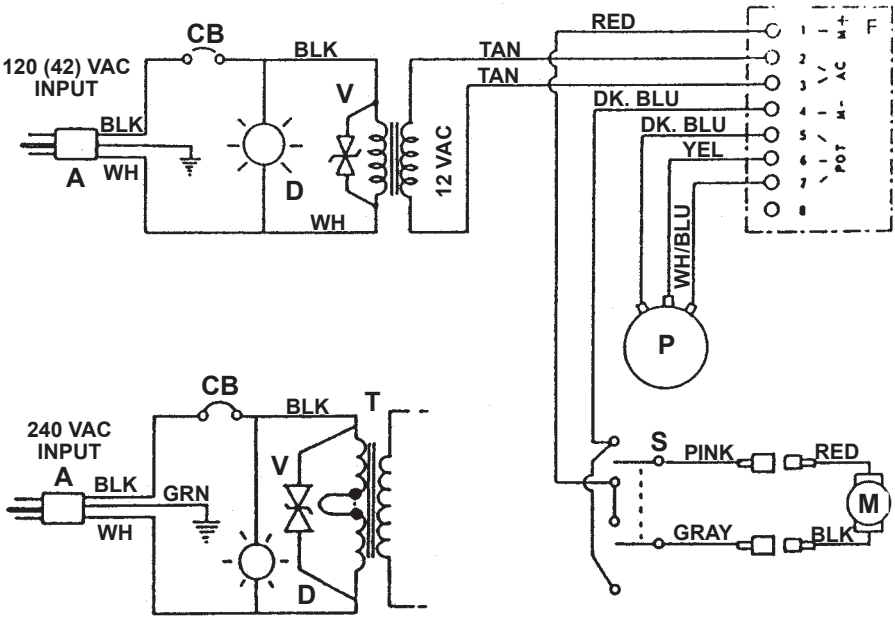

ELECTRICAL COMPONENT CHART

		PART NUMBER		
ITEM	**DESCRIPTION**	**BUG-5104-_BG 42VAC**	**BUG-5100-_BG 120VAC**	**BUG-5102-_BG 240VAC**
A	Power Cord	BUG-9442	BUG-9445	GOF-3115
CB	Circuit Breaker	BUG-2933 (2A)	BUG-2923 (.7A)	BUG-2952 (.5A)
D	Pilot Light	BUG-1427	BUG-1415	BUG-1428
V	Volt Trap	BUG-1393	BUG-1393	BUG-1563
T	Transformer	BUG-1466	BUG-9675	GOF-3112
M	Gear Motor			BUG-1550 (150:1) BUG-1600 (50:1) BUG-1595 (100:1)
F	Precision Speed Control			BUG-1725
S	Toggle Switch			BUG-2255
P	Potentiometer Control			BUG-9686

CARRIAGES FOR DC IV DRIVE UNITS

BUG-O SYSTEMS CARRIAGES are made of high-strength, lightweight aluminum alloys. The carriage wheels ride in opposed recessed grooves or ways in the ARR rails, locking the carriage to the rail in all positions. The pinion from the drive unit goes through the carriage and engages the rack on the rail, providing a positive drive. Two of the four wheels on each carriage are adjustable. The wheels contain permanently lubricated, sealed bearings. All steel components are plated to resist corrosion.

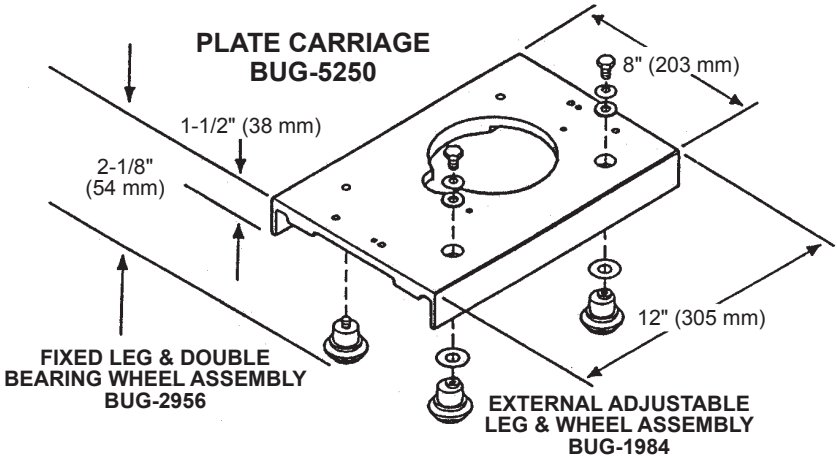

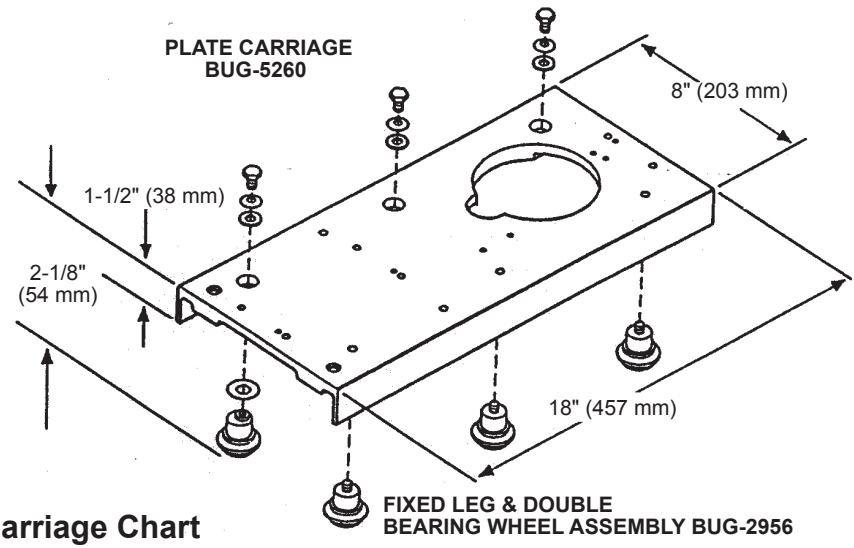

Carriage Chart

NUMBER	DESCRIPTION	NUMBER OF WHEELS	LOAD CAPACITY		DIMENSIONS H x W x L	
			Lbs	Kg	INCHES	MM
BUG-5250	12" Carriage	4	100	45	2-1/8x8x12	54x203x305
BUG-5260	18" Carriage	6	150	68	2-1/8x8x18	54x203x457

DETAILED SETUP

1. INSTALL RAIL

The Tube Carriage is designed for use with Bent Rigid Rail (BRR) or Ring Rail. The exact outside diameter (OD) of the work piece, including coating, must be known when ordering rail. Minimum pipe OD is 9 inches (229 mm). Rail is custom bent for each OD and features adjustable feet to accommodate pipe ovality and deviations in coating thickness.

2. SECURE CARRIAGE ON RAIL

A. Select the correct pair of holes on each side of the carriage for the rail diameter being used (see chart on next page). If the wheels are not attached to the correct set of holes, remove the wheel brackets and bolt them in selected holes. Tighten the bolts until the brackets are snug <u>but still free to rotate</u>.

B. Loosen the adjustment knob to separate the two halves of the split carriage. Loosen and turn the clutch knob counterclockwise to put the drive in the declutched position.

C. Place the carriage on the ring rail with the wheels in the rail grooves. Close the cam handle and move the carriage back and forth a few inches. The wheels on their mounting brackets will align themselves correctly with the rail grooves.

D. Verify that wheels are properly aligned, then tighten the wheel mounting bolts to lock them in position. Rotate the clutch knob clockwise to engage the drive pinion with the rack.

E. Verify that pinion is properly engaged in rack. The correct wheel position will provide a minimum of 1/8" (3.175 mm) engagement between the drive pinion and the gear rack.

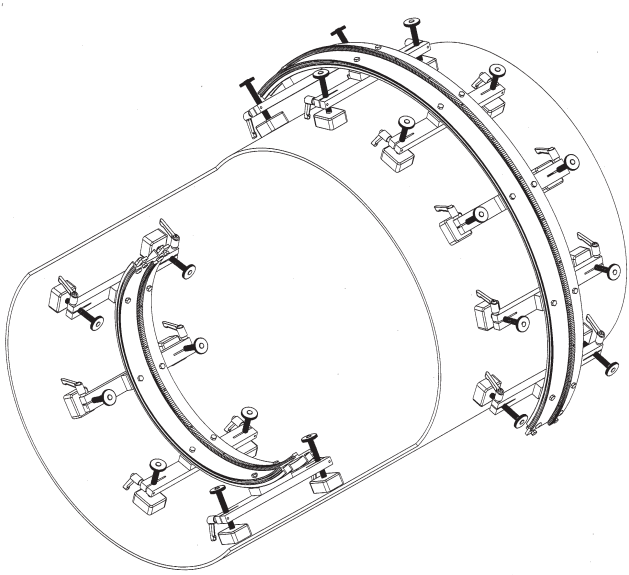

DETAILED SETUP, CONT'D.

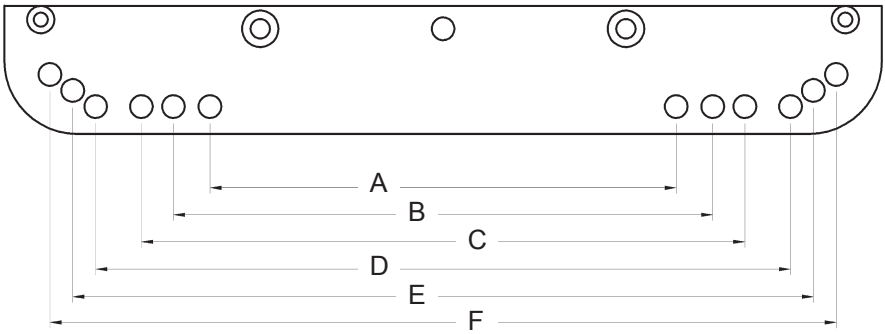

Carriage Wheel Hole Set	BRR-1210 Rail ID		Pipe OD	
	in	mm	in	mm
A	20 - 25	500 - 635	9 - 21	230 - 530
B	23 - 35	585 - 890	12 - 31	300 - 790
C	30 - 44	760 - 1120	18 - 40	455 - 1015
D	41 - 60	1040 - 1525	29 - 54	735 - 1375
E	75 - 174	1905 - 4420	64 - 170	1625 - 4320
F	flat rail		flat rail	

Notes:
1. Chart values are for reference only
2. Pinion height may need to be adjusted for some rail or pipe sizes.

3. POSITION AND CLAMP WELDING GUN

Secure welding gun in the all-position clamp located on the end of the height control mechanism. Arrange cables so that they do not interfere with the movement of the machine and secure in the cable anchor at the back of the machine.

OPTIONS FOR DC IV DRIVE UNITS

BUG-1630- Pendant Control
Factory installed option. Available in 10' (3.0 m) and 25' (7.6 m) lengths.
Includes:
Speed Control Knob and
Forward-Off-Reverse Travel Switch.

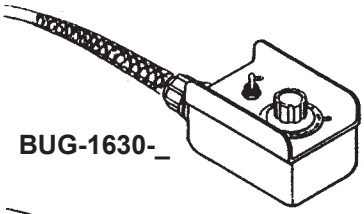

BUG-1630-_

BUG-1635- Pendant Control With Weld Starter
Factory installed option. Available in 10' (3.0 m) and 25' (7.6 m) lengths.
Includes:
Speed Control Knob,
Forward-Off-Reverse Travel Switch and
Weld Contactor Switch.

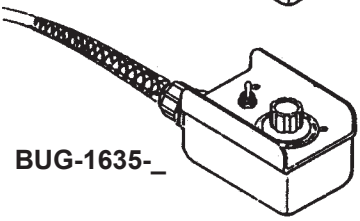

BUG-1635-_

BUG-1764-KIT Digital Readout
Factory installed option.
Displays speed of machine in inches/minutes (CM/M for 42 VAC and 240 VAC Models).

BUG-1764-KIT

BUG-9770 Limit Switch Kit
Factory installed option.
These Limit Switch Kits will stop the drive at the end of travel.

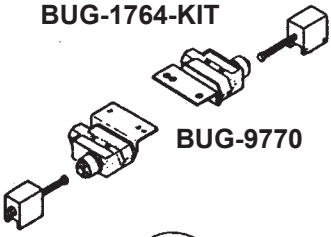

BUG-9770

BUG-9870 Stepping Module
Bolts to the DC drives.
Each time the Limit Switch is tripped and released - module provides adjustable timed power (0-3 seconds) to the DC drive. Travel distance is a combination of time and speed.

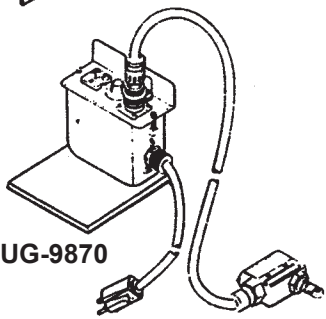

BUG-9870

BUG-5140 Cycler Option
Factory installed option.
Makes the drive cycle back and forth between limit switch stops.

STANDARD RACKING

This is a compact and rigid system which bolts to DC drives and can be used to hold a wide variety of cutting torches, welding guns, and other handheld tools. It consists of black anodized 7/8" (22 mm) square aluminum bars with 16-pitch machined racks and ways, right angle clamps, machined rack holders, and torch holders.

MDS-1040
Machined Rack Welding Group

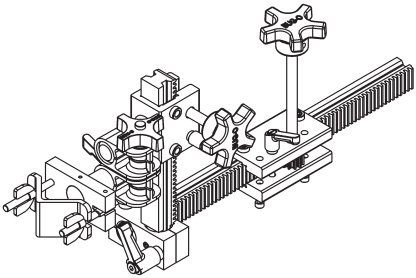

MDS-1050
Machined Rack Cutting Group

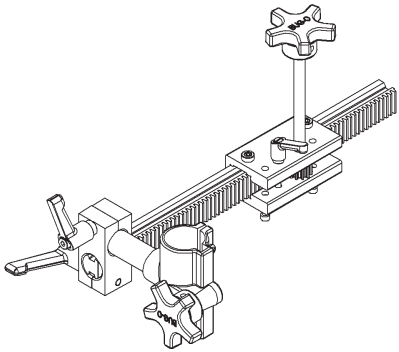

HEAVY DUTY RACK SYSTEM

This is a series of components which bolts to DC Drives and is designed to hold welding guns, cutting torches, and other process tools. The system consists of tube-racks, blocks, and clamps which are very rigid and compact.

BUG-5275
H.D. Welding Group

Designed to carry a welding gun and provides horizontal and vertical adjustment.

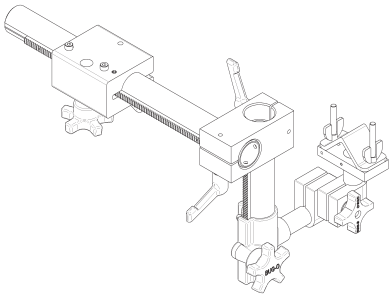

BUG-5285
H.D. Cutting Group

Designed to carry a machine barrel torch and provides horizontal adjustment.

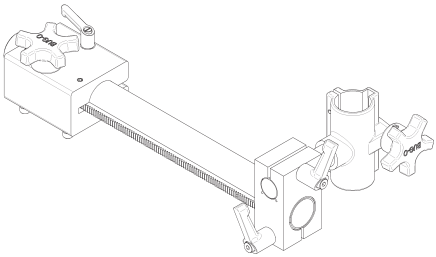

EXTRA HEAVY DUTY RACK SYSTEM

This is a small, manually operated torch manipulator. Rack and pinion movement on hardened “V” ways provides effortless and smooth positioning of cutting torch or welding gun. Available in three lengths, as shown below:

100-0442-19 DC-IV EHD Racking Kit, 19"

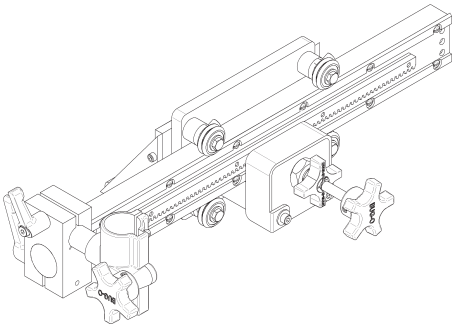

100-0442-33 DC-IV EHD Racking Kit, 33"

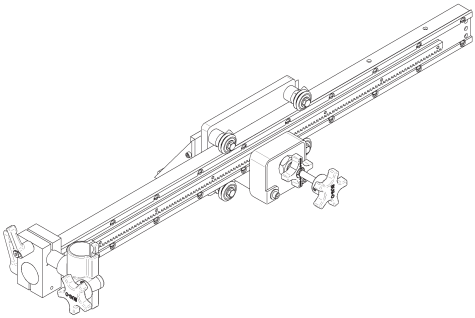

100-0442-40 DC-IV EHD Racking Kit, 40"

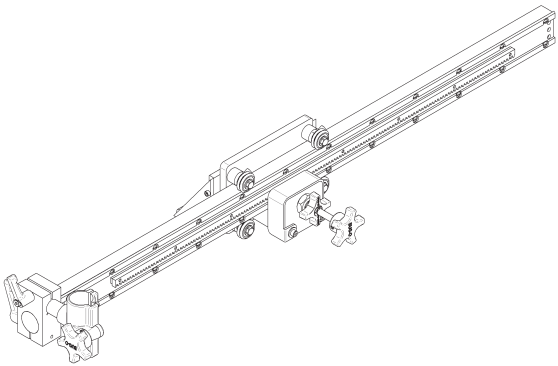

ALUMINUM RIGID RAIL / “ARR”

ALUMINUM RIGID RAIL is a rigid channel section made of high quality alloy to machine tool tolerance as in the sectional view shown below. A machined gear rack is mounted on the rail, with which the drive pinion of the carriage meshes. The wheels of the carriage travel in opposed grooves at either side of the rail, locking the carriage to the rail. Heavy duty [H.D.) aluminum four-legged rigid rail is supplied in two lengths: ARR-1080 [93-1/2" (2.37 m)] called 8" (2.37 m) rail and ARR-1085 [46-1/2" (1.18 m) called 4' (1.18 m) rail - see insert below. Extra heavy duty aluminum four-legged rigid rail: ARR-1250 [93-1/2" (2.37 m)] called 8' (2.37 m) rail and ARR-1200 [46-1/2" (1.18 m)] called 4' (1.18 m) rail, is also available.

RAIL FOR LONGER SPANS:
When unsupported rail paths longer than 93-1/2" (2.37 m) nominal 8' (2.37 m) rail are required, multiple sections of standard rail are mounted on plate, I-beam, channel or box sections.

ARR-1080 / H.D. ALUMINUM RIGID RAIL 8" (2.37 m)

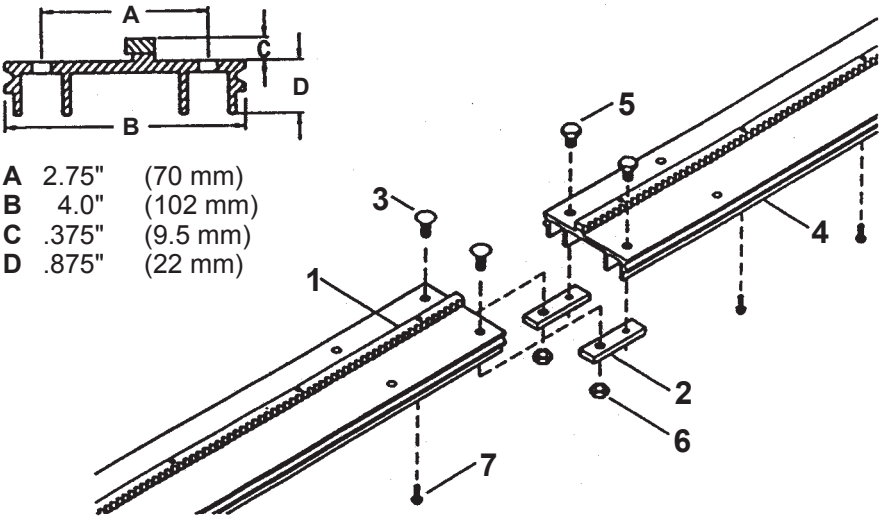

Parts List

ITEM	PART NO.	DESCRIPTION
1	ARR-1006	Rack
2	ARR-1027	Splice Bar
3	ARR-1028	Carriage Bolt
4	ARR-1081	Rail Extrusion
5	FAS-0375	Hex Hd Cap Screw 5/16-18 x 1/2 Long
6	FAS-1370	Hex Nut 5/16-18
7	FAS-1445	S.T. Pan Hd Screw 10-32 x 1/2

Aluminum Rigid Rail can be rolled to a radius of 15' (5 m) and larger for use on curved surfaces.

FLEX RAIL

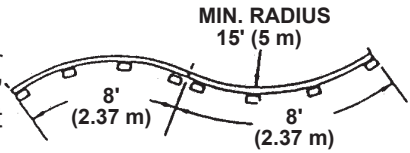

FLEX RAIL can be bent inside or outside to a minimum radius of 15' (5.0 m) or 30' (10.0 m) diameter without permanent deformation.

AFR-3000 FLEX RAIL replaces the old AFR-1000, 1010, 1020 and the later AFR-2000 rails. All the rack-mounting holes on the AFR-3000 Semi-Flex Rail are slotted so that the rack can slide along the rail. The length of the slots has been increased so that the rails can now be leapfrogged around a complete circle. The tension of the screws holding the rack on the rail is adjusted so that the rack can be moved along the rail with the AFR-2001 Rack-Adjusting Tool.

NOTE: Use at least four attachments (magnets or vacuum cups) on each FLEX RAIL.

AFR-3000 / FLEX RAIL

A 2.75" (70 mm)
B 4.0" (1 02 mm)
C .33" (8.5 mm)
D .500" (12.7 mm)

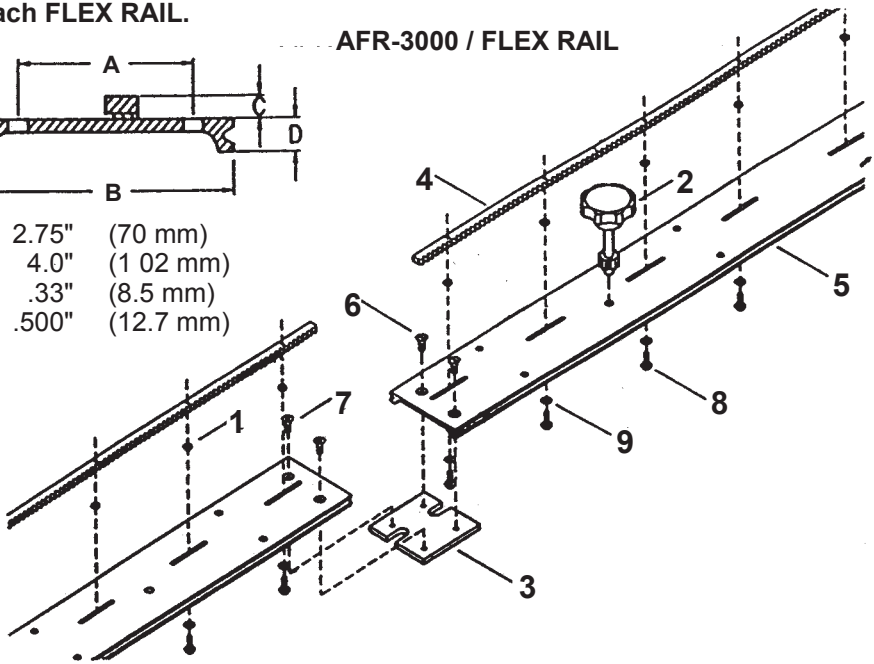

CAUTION: Bending beyond the recommended 15'-0" (5.0 m) radius may put a permanent bend in the rail and break off some of the rack screws.

Parts List

ITEM	PART NO.	DESCRIPTION
1	AFR-1015	Spacer Washer
2	AFR-2001	Rack Adjusting Tool
3	AFR-3002	Splice Plate
4	AFR-3006	Rack
5	AFR-3009	Extrusion, Punched
6	FAS-0855	Flt Hd Sit Scr 1/4-20 x 1/2
7	FAS-0955	Flt Hd Soc Screw 1/4-20 x 1/2
8	FAS-1446-HW	S.T. Slotted Hex w/ washer 10-32 x 5/8
9	WAS-0230	#10 Washer

STANDARD MAGNET ASSEMBLIES

MAGNET PLATE ASSEMBLIES mount on ARR rail quickly and conveniently right on the work surface. Magnets cannot exert maximum pull on dirty material. Remove excessive paint, scale and rust from the area on which the magnets will be placed.

KEEP MAGNETS CLEAN - before positioning, wipe off magnetic particles which adhere to the poles.

For **MAXIMUM HOLDING POWER** on swivel magnets, press down on top of each side of magnet...then rotate until it holds firmly. The magnet will retain its magnetism indefinitely - to preserve the magnet casing, keep torch 4" (100 mm) away from magnets when burning. Use various thicknesses of keepers to decrease the magnetic pull when required.

ARM-2248 - Magnet bar, short; compact for positioning in hard-to-reach or restricted areas. This assembly holds up to 200 lbs. (91 kg) on a flat, clean steel surface.

ARM-2010 - The New, Bug-O/ Mag-switch, Switchable On/Off Rare-Earth magnet assembly provides for quick rail positioning without fighting the magnet. The lighter weight, at just 1.7 lb. (.77 kg), less than all other magnet assemblies, improves handling. 200 lb. (90 kg) holding capacity. Fits standard ARR-rails.

ARM-2330 - Low profile magnet assembly with quick release lever; for use on jobs that have height restrictions. This assembly holds up to 200 lbs. (91 kg) on a flat, clean steel surface.

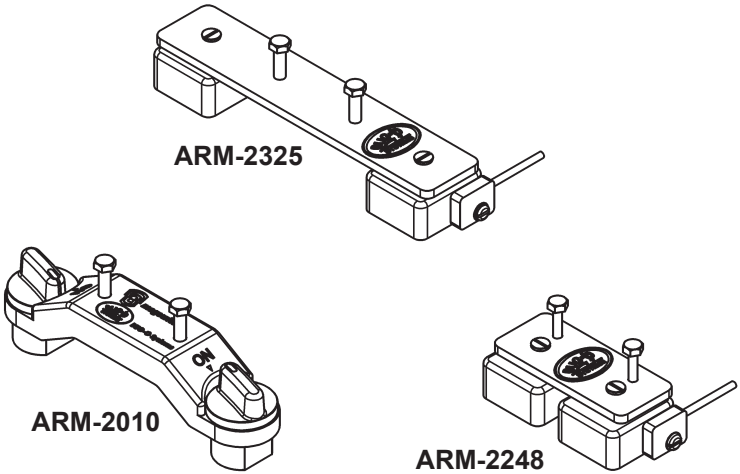

NOTE: Use four magnet assemblies per 8' (2.37 m) section and use two magnet assemblies per 4' (1.18 m) section.

VACUUM SUPPORT KIT

The standard Vacuum Support Kit, ARV-1080, consists of four (4) bars (with 8 cups) and associated hose and fittings. Some applications may require additional ARV-1036 Vacuum Support Bar assemblies. (See exploded view opposite page.)

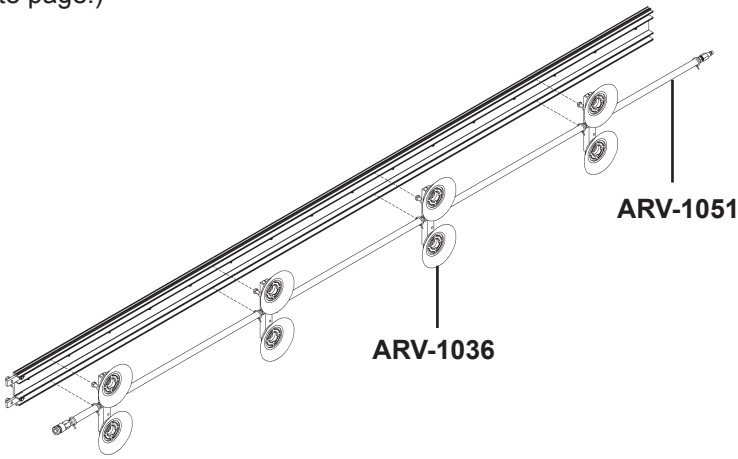

ARV-1080 Vacuum Support Kit

Vacuum bars require a source of vacuum, which is provided by a Vacuum Pump Kit (ARV-2020 [120 VAC]; ARV-2030 [240 VAC]). (See page 18 exploded view.)

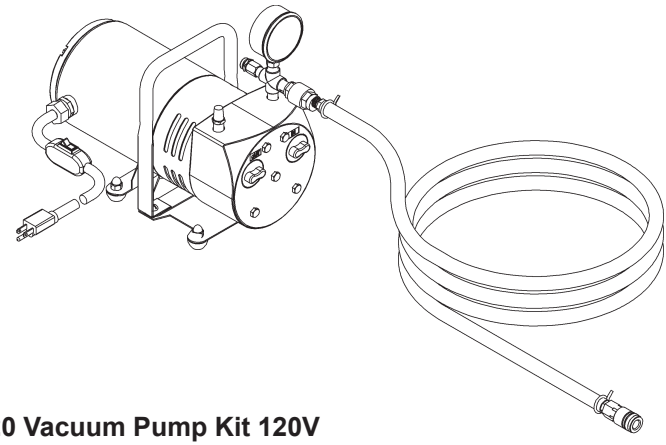

ARV-2020 Vacuum Pump Kit 120V
ARV-2030 Vacuum Pump Kit 240V

NOTE: Keep flame or arc at least 4" (l00 mm) away from vacuum cups. Vacuum cups can be used on preheated material to 600^0 F (318^0 C).

ARV-1036 INTERMEDIATE VAC SUPPORT BAR

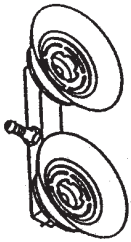

VACUUM CUPS are used for mounting the rail to the workpiece when magnet bars will not hold. EXAMPLE: Stainless steel or nonferrous surfaces. The surface must be smooth and nonporous.

Each vacuum bar is fitted with two (2) cups and will exert a maximum pull of 100 lbs. (45 kg).

ARV-1036 VACUUM SUPPORT KIT / EXPLODED VIEW

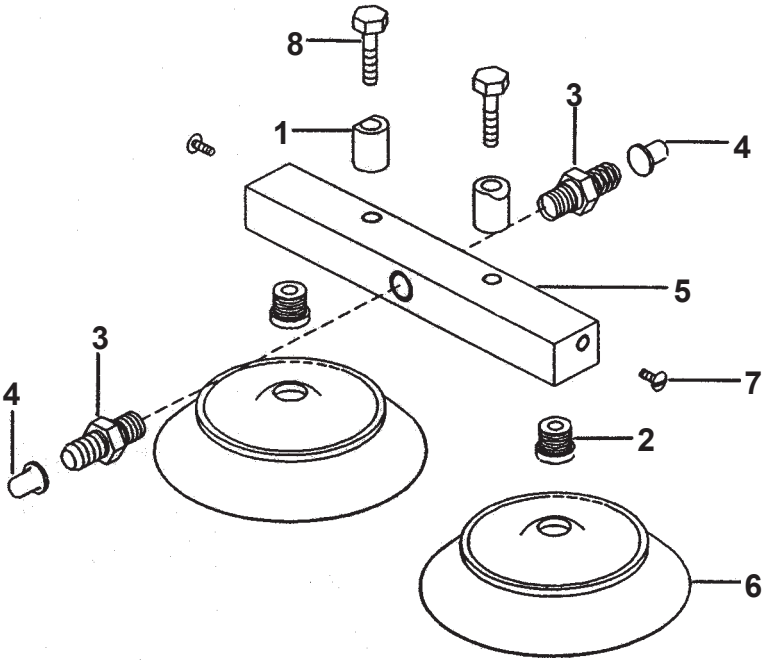

ARV-1036 VACUUM SUPPORT KIT / PARTS LIST

ITEM	QTY	PART NO.	DESCRIPTION
1	2	ARR-9008	Spacer Tube
2	2	ARV-1034	Choke Nipple
3	2	ARV-1107	3/8 Hose Barb x 1/4 NPT-M
4	2	ARV-1109	Protective Cap
5	1	ARV-1111	Support Bar
6	2	ARV-1116	Vacuum Cup (Silicone)
7	2	FAS-0252	Rnd Hd Scr 1/4-20 x 1/4
8	2	FAS-2372	Hex Hd Cap Scr 5/16-18 X 1-1/4

NOTE: Keep flame or arc at least 4" (100 mm) away from vacuum cups. Vacuum Cups can be used on preheated material to 600^0 F (318^0 C). Each vacuum cup exerts a maximum pull of 50 lbs. (22.5 kg).

VACUUM PUMP / EXPLODED VIEW

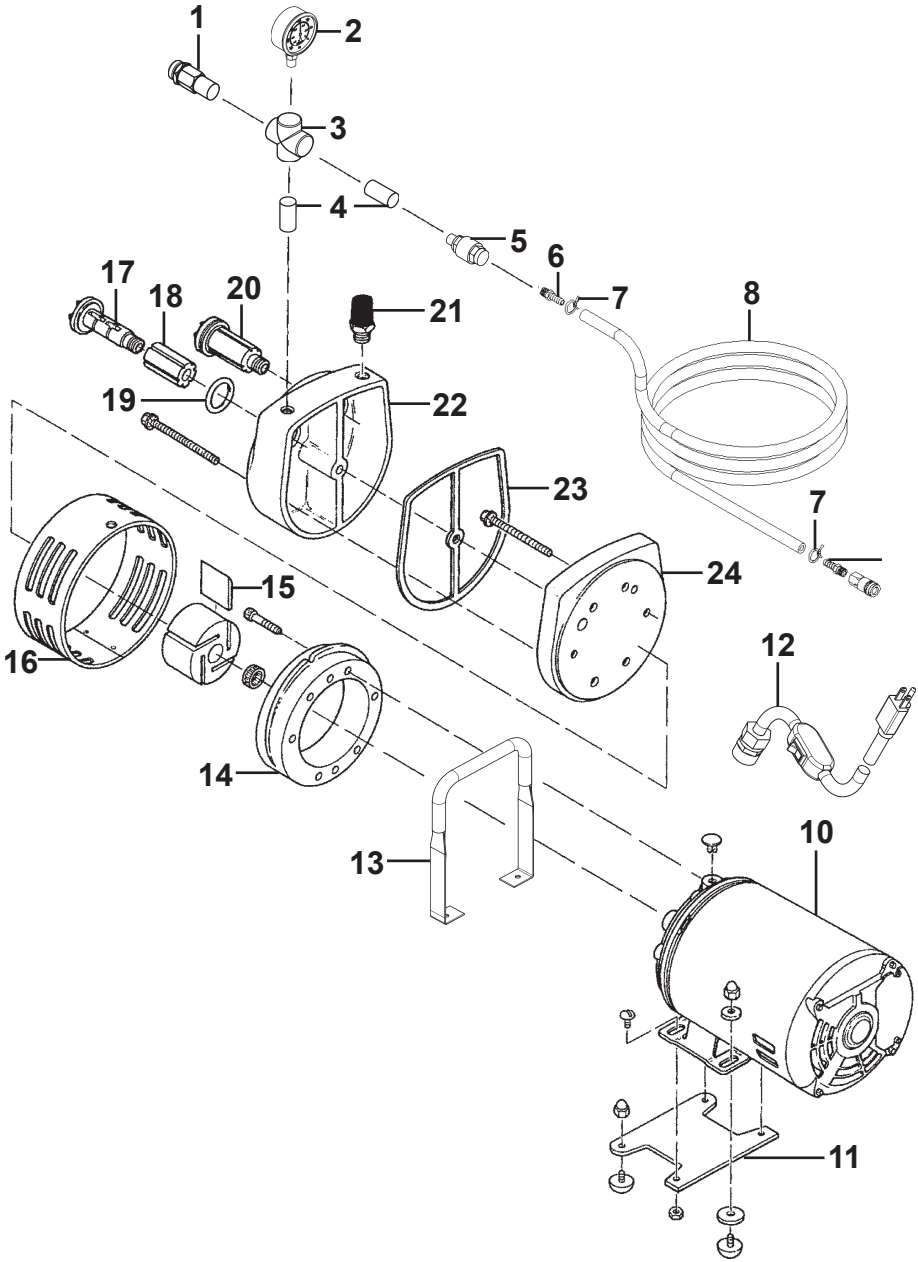

VACUUM PUMP / PARTS LIST

ITEM	QTY	PART NO.	DESCRIPTION
1	1	ARV-2017	1/4" Brass Vacuum Relief Valve
2	1	ARV-2014	Vacuum Gage
3	1	ARV-2018	1/4" NPT Union Cross, Female
4	2	ARV-2012	1/4" NPT Nipple
5	1	ARV-2016	1/4" NPT Brass Check Valve, F
6	2	ARV-1107	3/8" Hose Barb x 1/4" NPT-M
7	2	ARV-1005	11/16" X .112 Thk
8	1	ARV-1004-P	Hose 3/8" ID x 11/16" OD
9	1	ARV-1012	Female Quick Connector
10	1	ARV-2019	Pump
11	1	ARV-1999	Foot Support
12	1	ARV-2021	120 VAC Power Cord w/ Switch
13	1	ARV-2013	Handle
14	1	ARV-2011	Body
15	4	ARV-2010	Vane
16	1	ARV-2009	Shroud
17	2	ARV-2003	End Cap
18	2	ARV-2004	Felt
19	2	ARV-2005	O-ring
20	2	ARV-2002	End Cap Assembly
21	1	ARV-2001	Filter / Muffler
22	1	ARV-2006	Muffler Box
23	1	ARV-2007	Gasket
24	1	ARV-2008	End Plate

A Repair Kit is available for the **ARV-2020** and **ARV-2030** pumps. The kit contains (4) vanes, (1) body gasket, filter felts for the muffler, oiler filter, oiler wick, a cover gasket and separator felt for the oiler filter.

TROUBLESHOOTING GUIDE

PROBLEM	CAUSE	REMEDY
Does not run, indicator light off.	No power to machine.	Check power line supply voltage. Plug in line cord firmly.
Does not run, indicator light off.	Wiring shorts.	Disconnect machine and examine internally; rewire at fault.
Circuit breaker tripped.		If none found, throw direction switch to “OFF”, reset breaker and plug in.
	Shorted motor.	If breaker does not trip, replace drive unit.
	Faulty speed control board.	If breaker trips again, replace control board.
(OR)		
	Burned out transformer.	Replace transformer.
Does not run, indicator light on.	Bad connection.	Check wiring connections, 12 VAC should appear across secondary of transformer. Tighten terminal screws on speed control board.
	Faulty speed control board.	If DC Volts = 0 across leads to motor; replace control board.
Unit runs, but no control over speed	Faulty speed control board.	Replace control board. (Check connection first).

NOTE: Make sure unit is plugged into correct voltage, (120VAC, 240VAC, 42VAC) corresponding to Model No.rating.

WARRANTY

LIMITED 3-YEAR WARRANTY

MODEL _____
SERIAL NO. _____
DATE PURCHASED: _____
WHERE PURCHASED: _____

For a period ending one (1) year from the date of invoice, Manufacturer warrants that any new machine or part is free from defects in materials and workmanship and Manufacturer agrees to repair or replace at its option, any defective part or machine. HOWEVER, if the invoiced customer registers the Product Warranty by returning the Warranty Registration Card supplied with the product within 90 days of the invoice date, or by registering on-line at www.bugo.com, Manufacturer will extend the warranty period an additional two (2) years which will provide three (3) total years from the date of original invoice to customer. This warranty does not apply to machines which, after Manufacture's inspection are determined by Manufacturer to have been damaged due to neglect, abuse, overloading, accident or improper usage. All shipping and handling charges will be paid by the customer.

The foregoing express warranty is exclusive and Manufacturer makes no representation or warranty (either express or implied) other than as set forth expressly in the preceding sentence. Specifically, Manufacturer makes no express or implied warranty of merchantability or fitness for any particular purpose with respect to any goods. Manufacturer shall not be subject to any other obligations or liabilities whatsoever with respect to machines or parts furnished by Manufacturer.

Manufacturer shall not in any event be liable to Distributor or any customer for any loss of profits, incidental or consequential damages or special damages of any kind. Distributor's or customer's sole and exclusive remedy against Manufacturer for any breach of warranty, negligence, strict liability or any other claim relating to goods delivered pursuant hereto shall be for repair or replacement (at Manufacturer's option) of the machines or parts affected by such breach.

Distributor's Warranty:

In no event shall Manufacturer be liable to Distributor or to any customer thereof for any warranties, representations or promises, express or implied, extended by Distributor without the advance written consent of Manufacturer, including but not limited to any and all warranties of merchantability or fitness for a particular purpose and all warranties, representations or promises which exceed or are different from the express limited warranty set forth above. Distributor agrees to indemnify and hold Manufacturer harmless from any claim by a customer based upon any express or implied warranty by Distributor which exceeds or differs from Manufacturer's express limited warranty set forth above.

HOW TO OBTAIN SERVICE:
IF YOU THINK THIS MACHINE IS NOT OPERATING PROPERLY, RE-READ THE INSTRUCTION MANUAL CAREFULLY, THEN CALL YOUR AUTHORIZED BUG-O DEALER/DISTRIBUTOR. IF THEY CANNOT GIVE YOU THE NECESSARY SERVICE, WRITE OR PHONE US TO TELL US EXACTLY WHAT DIFFICULTY YOU HAVE EXPERIENCED. BE SURE TO MENTION THE MODEL AND SERIAL NUMBERS.